Pressure regulators-stabilizers PC - series

Function

Pressure regulators-stabilizers are applied for regulation and keeping the outlet pressure (gas flow rate) stable within set values regardless the inlet pressure change of hydrocarbon gases, gas phases of liquified gases, compressed air and other non-aggressive gases. Pressure regulators-stabilizers operate without external power source.

Field of application

Gas pressure regulating stations and plants, gas burners, gas consuming devices and devices of similar purpose, which require to maintain the pressure (gas flow rate) stable.

Code structure

1	2	3	4	5	6
PC	1	0,5	5	20	ТУ BY 200020142.030-2013

1. **PC**— series
2. Connection size, inches:
3. Max. operating pressure:
   0,5 — 0,5 bar;
   6 — 6 bar.

4, 5. Outlet pressure adjustment range (lower — upper limit), bar.

6. Technical conditions number.

Climatic version:

–30...+40 ^{O}C and –40...+40 ^{O}C — installation in closed unheated premises (spaces).

Notes:

Outlet pressure adjustment range is determined by the type of spring, installed in regulator's body.

For regulators-stabilizers PC½, PC¾, PC1, PC1¼, PC1½, PC2 type of connection should be specified: threaded or flanged connection.

Body material of regulator-stabilizer — aluminium, steel.

Pressure regulators-stabilizers
for max. inlet pressure 0,5 bar

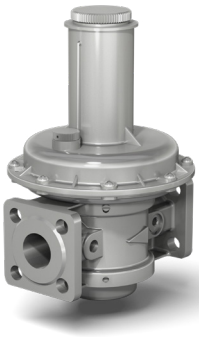

№ p/p	Characteristics	PC ½–0,5	PC ¾–0,5	PC 1–0,5	PC 1¼–0,5	PC 1½–0,5	PC 2–0,5	PC ½–0,5 fl.	PC ¾–0,5 fl.	PC 1–0,5 fl.	PC 1¼–0,5 fl.	PC 1½–0,5 fl.	PC 2–0,5 fl.	PC 2½–0,5	PC 3–0,5	PC 4–0,5	PC 6–0,5
1	Body material	aluminium															steel
2	Nominal diameter (DN)	15	20	25	32	40	50	15	20	25	32	40	50	65	80	100	150
3	Max. inlet operating pressure, bar.	0,5															
4	Thread diameter (G), inches	½	¾	1	1¼	1½	2	-									
5	Center to center distance of connecting orifices, mm. / orifice diameter, mm.	-						55 / 12	65 / 12	75 / 11	90 / 14	100 / 14	110 / 14	130 / 14	150 / 18	170 / 18	225 / 18
6	Outlet pressure adjustment range, mbar	2,5–9; 5–13; 5–20; 10–30; 25–55; 30–70; 60–110; 100–150; 140–200															14-40; 30-80; 50-200
		(determined by the type of spring used)															
7	Weight, kg., max.	2,0		2,3	6,0	6,2	6,5	2,6		3,7	4,5	6,5	6,9	11	15	18	100
8	Dimensions, mm., max.																
	а) Length	105			162			147		160	187			235	258	278	400
	б) Width	143			250			143			250			285		356	490
	в) Height	225			400			225		233	400			410	430	530	870
9	Temperature of operation medium, °C	–30...+70															
10	Mounting position	Horizontal (recommended), vertical															

Max. flow capacity
for pressure regulators with max. operating pressure 0,5 bar

Max. flow capacity, DN 15, nm3/h													
P inlet, mbar	P outlet, mbar												
	2,5	5	9	10	13	20	25	30	60	70	100	150	200
100	8	8	9	9	10	11	12	13	19	-	-	-	-
300	9	10	11	11	12	13	14	16	23	25	32	41	-
500	11	11	12	13	13	15	17	18	26	29	37	48	64

Max. flow capacity, DN 20, nm3/h													
P inlet, mbar	P outlet, mbar												
	2,5	5	9	10	13	20	25	30	60	70	100	150	200
100	19	20	21	21	21	23	23	25	31	-	-	-	-
300	23	23	24	24	25	27	28	29	36	38	46	57	-
500	26	27	28	28	29	31	32	34	42	44	53	66	80

Max. flow capacity, DN 25, nm3/h													
P inlet, mbar	P outlet, mbar												
	2,5	5	9	10	13	20	25	30	60	70	100	150	200
100	36	37	37	37	37	39	40	40	45	-	-	-	-
300	42	43	44	44	45	46	47	48	53	55	61	69	-
500	49	50	51	51	51	53	54	55	61	63	70	80	90

Max. flow capacity, DN 32, nm3/h													
P inlet., mbar	P outlet, mbar												
	2,5	5	9	10	13	20	25	30	60	70	100	150	200
100	50	51	54	54	56	59	62	65	82	-	-	-	-
300	59	61	63	64	66	70	74	77	97	104	124	157	-
500	68	70	73	74	76	81	85	89	112	120	143	181	220

Max. flow capacity, DN 40, nm3/h													
P inlet, mbar	P outlet, mbar												
	2,5	5	9	10	13	20	25	30	60	70	100	150	200
100	93	94	95	96	97	100	102	104	117	-	-	-	-
300	109	111	113	113	115	118	121	123	138	143	158	183	-
500	126	128	130	130	132	136	139	142	159	165	182	211	240

Max. flow capacity, DN 50, nm3/h													
P inlet, mbar	P outlet, mbar												
	2,5	5	9	10	13	20	25	30	60	70	100	150	200
100	213	215	219	220	223	229	234	238	266	-	-	-	-
300	252	254	259	260	263	271	276	282	315	326	358	413	-
500	290	293	298	300	303	312	319	325	363	376	414	477	540

Max. flow capacity, DN 65, nm3/h													
P inlet, mbar	P outlet, mbar												
	2,5	5	9	10	13	20	25	30	60	70	100	150	200
100	277	281	289	291	297	311	320	330	388	-	-	-	-
300	327	333	342	344	351	367	379	390	459	482	551	665	-
500	377	384	394	397	405	424	437	450	529	556	635	768	900

Max. flow capacity, DN 80, nm3/h													
P inlet, mbar	P outlet, mbar												
	2,5	5	9	10	13	20	25	30	60	70	100	150	200
100	374	379	387	389	395	409	419	429	489	-	-	-	-
300	442	448	457	460	467	483	495	507	578	602	673	791	-
500	510	517	528	530	539	558	571	585	667	694	776	913	1050

Max. flow capacity, DN 100, nm3/h													
P inlet, mbar	P outlet, mbar												
	2,5	5	9	10	13	20	25	30	60	70	100	150	200
100	474	480	490	493	500	518	530	543	618	-	-	-	-
300	560	567	579	582	591	612	627	641	730	760	848	996	-
500	646	655	668	672	682	706	723	740	842	876	979	1149	1320

Max. flow capacity, DN 150, nm3/h										
P inlet, mbar	P outlet, mbar									
	14	20	30	40	50	60	80	100	150	200
100	760	788	825	863	902	940	-	-	-	-
300	900	930	975	1020	1060	1100	1195	1290	1510	-
500	1030	1070	1125	1180	1230	1280	1385	1490	1750	2000

Pressure regulators-stabilizers
for max. inlet pressure 6 bar

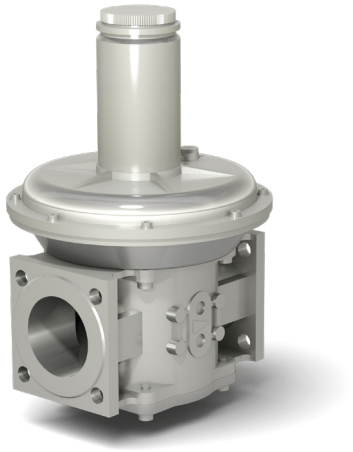

№ p/p	Characteristics	PC ½–6	PC ¾–6	PC 1–6	PC 1¼–6	PC 1½–6	PC 2–6	PC ½–6 fl.	PC ¾–6 fl.	PC 1–6 fl.	PC 1¼–6 fl.	PC 1½–6 fl.	PC 2–6 fl.	PC 2½–6	PC 3–6	PC 4–6	PC 6–6
1	Body material	aluminium															steel
2	Nominal diameter (DN)	15	20	25	32	40	50	15	20	25	32	40	50	65	80	100	150
3	Max. inlet operating pressure, bar.	6															
4	Thread diameter (G), inches	½	¾	1	1¼	1½	2	-									
5	Center to center distance of connecting orifices, mm. / orifice diameter, mm.	-						55 / 12	65 / 12	75 / 11	90 / 14	100 / 14	110 / 14	130 / 14	150 / 18	170 / 18	225 / 18
6	Outlet pressure adjustment range, mbar	90–200; 120–270; 240–570		80-160; 110-230; 180-520	80–180; 160–260; 250–450			90–200; 120–270; 240–570		80-160; 110-230; 180-520	80–180; 160–260; 250–450			80–200; 110–300; 160–390		80-140; 100-180; 160-240	160-350
		(determined by the type of spring used)															
7	Weight, kg., max.	2,0		2,3	6,2	6,7	7,1	2,6		3,7	4,7	6,7	7,1	11	15	18	100
8	Dimensions, mm., max.																
	а) Length	105			162			147		160	187			235	258	278	400
	б) Width	143			250			143			250			285		356	490
	в) Height	225			460			225		233	460			472	492	530	870
9	Temperature of operation medium, °C	–30...+70															
10	Mounting position	Horizontal (recommended), vertical															

Max. flow capacity
for pressure regulators with max. operating pressure 6 bar

Max. flow capacity, DN 15, nm3/h						
P inlet, mbar	P outlet, mbar					
	90	120	200	240	270	570
500	52	62	64	100	110	-
1000	76	89	108	146	157	177
3000	128	162	200	256	261	353
6000	134	182	228	256	266	358

Max. flow capacity, DN 20, nm3/h						
P inlet, mbar	P outlet, mbar					
	90	120	200	240	270	570
500	65	78	80	125	138	-
1000	95	111	135	182	196	221
3000	160	202	250	320	326	441
6000	168	228	285	320	333	448

Max. flow capacity, DN 25, nm3/h						
P inlet, mbar	P outlet, mbar					
	80	100	160	180	230	520
500	70	85	88	110	140	-
1000	102	140	128	160	200	230
3000	173	260	316	270	330	450
6000	192	300	240	300	340	460

Max. flow capacity, DN 32, nm3/h						
P inlet, mbar	P outlet, mbar					
	80	160	180	250	260	450
500	249	196	214	151	151	125
1000	356	303	321	249	249	356
3000	909	873	873	802	802	802
6000	1247	1212	1230	1247	1247	1247

Max. flow capacity, DN 40, nm3/h						
P inlet, mbar	P outlet, mbar					
	80	160	180	250	260	450
500	277	217	237	168	168	138
1000	396	336	356	277	277	396
3000	1009	970	970	891	891	891
6000	1386	1346	1366	1386	1386	1386

Max. flow capacity, DN 50, nm3/h						
P inlet, mbar	P outlet, mbar					
	80	160	180	250	260	450
500	308	242	264	187	187	154
1000	440	374	396	308	308	440
3000	1122	1078	1078	990	990	990
6000	1540	1496	1518	1540	1540	1540

Max. flow capacity, DN 65, nm3/h						
P inlet, mbar	P outlet, mbar					
	80	110	160	200	300	390
500	840	900	840	900	780	720
1000	1200	1320	1320	1320	1320	1320
3000	2700	2700	2700	2700	2700	2700
6000	2700	2700	2700	2700	2700	2700

Max. flow capacity, DN 80, nm3/h						
P inlet, mbar	P outlet, mbar					
	80	110	160	200	300	390
500	980	1050	980	1050	910	840
1000	1400	1540	1540	1540	1540	1540
3000	3150	3150	3150	3150	3150	3150
6000	3150	3150	3150	3150	3150	3150

Max. flow capacity, DN 100, nm3/h						
P inlet, mbar	P outlet, mbar					
	80	110	160	200	300	390
500	1400	1500	1500	1300	1400	1200
1000	2000	2200	2200	2200	2200	2200
3000	4500	4500	4500	4500	4500	4500
6000	4500	4500	4500	4500	4500	4500

Max. flow capacity, DN 150, nm3/h					
P inlet, mbar	P outlet, mbar				
	160	200	250	300	350
500	2000	1850	1900	2000	1800
1000	2800	3100	3100	3100	3100
3000	6300	6300	6300	6300	6300
6000	6300	6300	6300	6300	6300

Pressure regulators-stabilizers
(with PN 16 flanges)

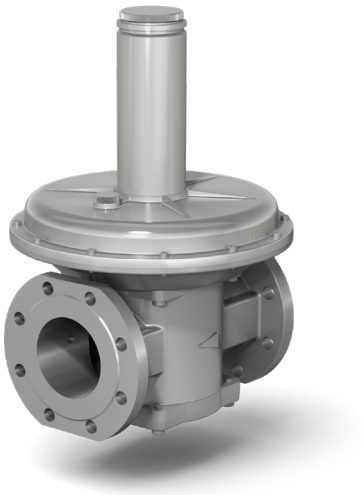

№ п/п	Characteristics	PC 1¼–0,5 fl., PN 16	PC 1½–0,5 fl., PN 16	PC 2–0,5 fl., PN 16	PC 2½–0,5, PN 16	PC 3–0,5, PN 16	PC 4–0,5, PN 16	PC 1¼–6 fl., PN 16	PC 1½–6 fl., PN 16	PC 2–6 fl., PN 16	PC 2½–6, PN 16	PC 3–6, PN 16	PC 4–6, PN 16
Version		with PN 16 flanges											
1	Body material	aluminium											
2	Nominal diameter (DN)	32	40	50	65	80	100	32	40	50	65	80	100
3	Max. inlet operating pressure, bar.	0,5						6					
4	Center to center distance of connecting orifices, mm. / orifice diameter, mm. (number of orifices)	100 / 18 (4)	110 / 18 (4)	125 / 18 (4)	145 / 18 (4)	160 / 18 (8)	180 / 18 (8)	100 / 18 (4)	110 / 18 (4)	125 / 18 (4)	145 / 18 (4)	160 / 18 (8)	180 / 18 (8)
5	Outlet pressure adjustment range, mbar	2,5–9; 5–13; 5–20; 10–30; 25–55; 30–70; 60–110; 100–150; 140–200						80–180; 160–260; 250–450			80–200; 110–300; 160–390		80-140; 100-180; 160-240
		(determined by the type of spring used)											
6	Weight, kg., max.	7,1	7,4	7,7	12	16	19	7,3	7,5	7,9	12	16	19
7	Dimensions, mm., max.												
	а) Length (installation)	230			260	290	314	230			260	290	314
	б) Width	250			285		356	250			285		356
	в) Height	400			410	430	530	460			472	492	530
8	Temperature of operation medium, °C	–30...+70											
9	Mounting position	Horizontal (recommended), vertical											

Gas flow capacity of pressure regulators-stabilizers with PN16 flanges - see pages 107, 109.

Ordering the pressure regulator with PN 16 flanges, please, specify the type of connecting flanges.
Order example: Pressure regulator PC3-0,5-10-30 (Version: with PN 16 flanges

Pressure regulators-stabilizers
with safety relief valve built in

Function

Pressure regulators-stabilizers with safety relief valve built in are applied for regulation and keeping the outlet pressure (gas flow rate) stable within set values regardless the inlet pressure change of hydrocarbon gases, gas phases of liquified gases, compressed air and other non-aggressive gases. Pressure regulators-stabilizers operate without external power source.

Safety relief valve as a part of regulator releases excess volume of gas to the atmosphere, when outlet pressure slightly exceeds the set values.

Field of application

Gas pressure regulating stations and plants, gas burners, gas consuming devices and devices of similar purpose, which require to maintain the pressure (gas flow rate) stable.

Code structure

1	2	3	4	5	6	7
PC	x	x	x-x	C	x-x	ТУ BY 200020142.030-2013

1. **PC** — series
2. Connection size, inches
3. Max. operating pressure range:
   0,5 — 0,5 bar
   6 — 6 bar
4. Outlet pressure adjustment range, mbar (lower - upper limit)
5. **C** — equipped with safety relief valve built in
6. Actuation range of safety relief valve, mbar (lower - upper limit)
7. Technical conditions number.

Climatic version:
-30...+40 °C and -40...+40 °C — installation in closed unheated premises (spaces).

Notes:

Outlet pressure adjustment range is determined by the type of spring, installed in regulator's body.

For regulators-stabilizers PC1, PC1¼, PC1½, PC2 type of connection should be specified: threaded or flanged connection.

Body material — aluminium.

Pressure regulators-stabilizers

with safety relief valve built in for max. inlet pressure 0,5 bar

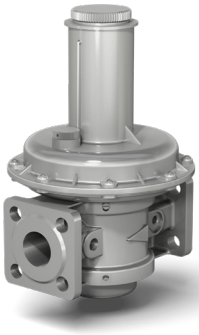

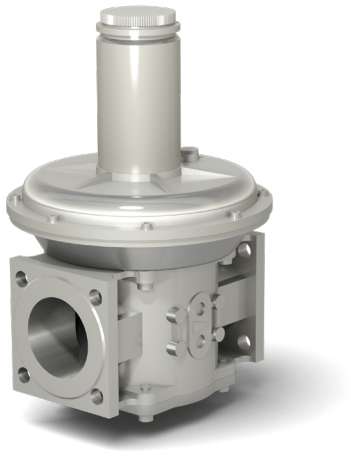

№ p/p	Characteristics	PC ½–0,5 - ... - C - ...	PC ¾–0,5 - ... - C - ...	PC 1–0,5 - ... - C - ...	PC 1¼–0,5 - ... - C - ...	PC 1½–0,5 - ... - C - ...	PC 2–0,5 - ... - C - ...	PC ½–0,5 - ... - C - ... fl.	PC ¾–0,5 - ... - C - ... fl.	PC 1–0,5 - ... - C - ... fl.	PC 1¼–0,5 - ... - C - ... fl.	PC 1½–0,5 - ... - C - ... fl.	PC 2–0,5 - ... - C - ... fl.	PC 2½–0,5 - ... - C - ...	PC 3–0,5 - ... - C - ...	PC 4–0,5 - ... - C - ...
1	Body material	aluminium														
2	Nominal diameter (DN)	15	20	25	32	40	50	15	20	25	32	40	50	65	80	100
3	Max. inlet operating pressure, bar.	0,5														
4	Thread diameter (G), inches	½	¾	1	1¼	1½	2	-								
5	Center to center distance of connecting orifices, mm. / orifice diameter, mm.	-						55 / 12	65 / 12	75 / 11	90 / 14	100 / 14	110 / 14	130 / 14	150 / 18	170 / 18
6	Outlet pressure adjustment range, mbar	7–15; 8–20; 7–30; 11–44; 25–70; 31–100; 60–130; 90–170; 75–210; 165–300			5,5–10; 6,5–18; 5,5–30; 8–40; 25–55; 25–70; 45–100; 80–150; 80–200			7–15; 8–20; 7–30; 11–44; 25–70; 31–100; 60–130; 90–170; 75–210; 165–300			5,5–10; 6,5–18; 5,5–30; 8–40; 25–55; 25–70; 45–100; 80–150; 80–200			5,5–9; 8–11; 6,5–13; 8,5–22; 23–42; 19–50; 48–85; 75–120; 80–150		5,5-10; 6-15; 6-20; 10-35; 20-50; 20-70; 45-100 75-150; 70-190
		(determined by the type of spring used)														
7	Actuation range of safety relief valve, mbar	7–400			5,5–30 8–205			7–400			5,5–30 8–205			5,5–65 40–170		2,5–80 30–250
8	Weight, kg., max.	2,1		2,4	6,5	7,0	7,4	2,8		3,9	6,5	7,0	7,4	11,3	15,4	18,5
9	Dimensions, mm., max.															
	а) Length	105			162			147		160	187			235	258	278
	б) Width	143			250			143			250			285		356
	в) Height	246			490			233			490			410	430	530
10	Temperature of operation medium, °C	–30...+70														
11	Mounting position	Horizontal (recommended), vertical														

Max. flow capacity
for pressure regulators with safety relief valve built in with max. operating pressure 0,5 bar

Max. flow capacity, DN 15, nm3/h													
P inlet., mbar	P outlet, mbar												
	2,5	5	9	10	13	20	25	30	60	70	100	150	200
100	7	7	8	8	9	10	11	12	17	-	-	-	-
300	8	9	10	10	11	12	13	14	21	23	29	37	-
500	10	10	11	12	12	14	15	16	24	26	33	43	58

Max. flow capacity, DN 20, nm3/h													
P inlet, mbar	P outlet, mbar												
	2,5	5	9	10	13	20	25	30	60	70	100	150	200
100	17	18	20	20	20	21	21	23	28	-	-	-	-
300	21	21	22	22	23	24	25	26	32	34	41	52	-
500	23	24	25	25	26	28	29	31	39	40	48	59	72

Max. flow capacity, DN 25, nm3/h													
P inlet, mbar	P outlet, mbar												
	2,5	5	9	10	13	20	25	30	60	70	100	150	200
100	32	33	33	33	33	35	36	36	41	-	-	-	-
300	38	39	40	40	41	42	43	44	48	50	55	62	-
500	44	45	46	46	46	48	49	50	55	57	63	72	81

Max. flow capacity, DN 32, nm3/h													
P inlet, mbar	P outlet, mbar												
	2,5	5	9	10	13	20	25	30	60	70	100	150	200
100	45	46	49	49	50	53	56	59	74	-	-	-	-
300	53	55	57	58	59	63	67	69	87	94	111	141	-
500	61	63	66	67	68	73	77	80	101	108	129	163	198

Max. flow capacity, DN 40, nm3/h													
P inlet, mbar	P outlet, mbar												
	2,5	5	9	10	13	20	25	30	60	70	100	150	200
100	84	85	86	86	87	90	92	94	104	-	-	-	-
300	98	100	102	102	104	106	109	111	124	129	142	165	-
500	113	115	117	117	119	122	125	128	143	149	164	190	216

Max. flow capacity, DN 50, nm3/h													
P inlet, mbar	P outlet, mbar												
	2,5	5	9	10	13	20	25	30	60	70	100	150	200
100	192	194	197	198	201	206	211	214	239	-	-	-	-
300	227	229	233	234	237	244	248	254	284	293	322	372	-
500	261	264	268	270	273	281	287	293	327	338	373	429	486

Max. flow capacity, DN 65, nm3/h													
P inlet, mbar	P outlet, mbar												
	2,5	5	9	10	13	20	25	30	60	70	100	150	200
100	249	253	260	262	267	280	288	297	349	-	-	-	-
300	294	300	308	310	316	330	341	351	413	434	496	599	-
500	339	346	355	357	365	382	393	405	476	500	572	691	810

Max. flow capacity, DN 80, nm3/h													
P inlet, mbar	P outlet, mbar												
	2,5	5	9	10	13	20	25	30	60	70	100	150	200
100	337	341	348	350	356	268	377	386	440	-	-	-	-
300	398	403	411	414	420	435	446	456	520	542	606	712	-
500	459	465	475	477	485	502	514	527	600	625	698	822	945

Max. flow capacity, DN 100, nm3/h													
P inlet., mbar	P outlet, mbar												
	2,5	5	9	10	13	20	25	30	60	70	100	150	200
100	427	432	441	444	450	466	477	489	556	-	-	-	-
300	504	510	521	524	532	551	564	577	657	684	763	896	-
500	581	590	601	605	614	636	651	666	758	788	881	1034	1188

Pressure regulators-stabilizers

with safety relief valve built in for max. inlet pressure 6 bar

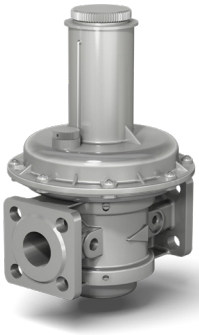

№ p/p	Characteristics	PC ½–6 - ... - C - ...	PC ¾–6 - ... - C - ...	PC 1–6 - ... - C - ...	PC 1¼–6 - ... - C - ...	PC 1½–6 - ... - C - ...	PC 2–6 - ... - C - ...	PC ½–6 - ... - C - ... fl.	PC ¾–6 - ... - C - ... fl.	PC 1–6 - ... - C - ... fl.	PC 1¼–6 - ... - C - ... fl.	PC 1½–6 - ... - C - ... fl.	PC 2–6 - ... - C - ... fl.	PC 2½–6 - ... - C - ...	PC 3–6 - ... - C - ...	PC 4–6 - ... - C - ...
1	Body material	aluminium														
2	Nominal diameter (DN)	15	20	25	32	40	50	15	20	25	32	40	50	65	80	100
3	Max. inlet operating pressure, bar.	6														
4	Thread diameter (G), inches	½	¾	1	1¼	1½	2	-								
5	Center to center distance of connecting orifices, mm. / orifice diameter, mm.	-						55 / 12	65 / 12	75 / 11	90 / 14	100 / 14	110 / 14	130 / 14	150 / 18	170 / 18
6	Outlet pressure adjustment range, mbar	110–175; 110–240; 185–560			110–245; 175–370; 185–460			110–175; 110–240; 185–560			110–245; 175–370; 185–460			130–230; 165–390		70–150; 100–230
		(determined by the type of spring used)														
7	Actuation range of safety relief valve, mbar	110–600			30–270 150–500			110–600			30–270 150–500			130–300 280–460		50–180 80–250
8	Weight, kg., max.	2,1		2,4	6,3	6,8	7,2	2,8		3,9	6,3	6,8	7,2	11,3	15,4	18,5
9	Dimensions, mm., max.															
	а) Length	105			162			147		160	187			235	258	278
	б) Width	143			250			143			250			285		356
	в) Height	246			460			233			460			410	430	530
10	Temperature of operation medium, °C	–30...+70														
11	Mounting position	Horizontal (recommended), vertical														

Max. flow capacity
for pressure regulators with safety relief valve built in with max. operating pressure 6 bar

Max. flow capacity, DN 15, nm3/h						
P inlet, mbar	P outlet, mbar					
	90	120	200	240	270	570
500	47	56	58	90	99	-
1000	68	80	97	131	141	159
3000	115	146	180	230	235	318
6000	121	164	205	230	239	322

Max. flow capacity, DN 20, nm3/h						
P inlet, mbar	P outlet, mbar					
	90	120	200	240	270	570
500	59	70	72	113	124	-
1000	86	100	122	164	176	199
3000	144	182	225	288	293	397
6000	151	205	257	288	300	403

Max. flow capacity, DN 25, nm3/h						
P inlet, mbar	P outlet, mbar					
	80	100	160	180	230	520
500	63	77	79	99	126	-
1000	92	126	115	144	180	207
3000	156	234	194	243	297	405
6000	151	205	257	288	300	403

Max. flow capacity, DN 32, nm3/h						
P inlet, mbar	P outlet, mbar					
	80	160	180	250	260	450
500	224	176	193	136	136	113
1000	320	273	289	224	224	320
3000	818	786	786	722	722	722
6000	1120	1090	1100	1120	1120	1120

Max. flow capacity, DN 40, nm3/h						
P inlet, mbar	P outlet, mbar					
	80	160	180	250	260	450
500	249	195	213	151	151	124
1000	356	302	320	249	249	356
3000	905	870	870	800	800	800
6000	1240	1210	1230	1240	1240	1240

Max. flow capacity, DN 50, nm3/h						
P inlet, mbar	P outlet, mbar					
	80	160	180	250	260	450
500	277	218	238	168	168	138
1000	396	336	356	277	277	396
3000	1000	970	970	890	890	890
6000	1380	1345	1365	1380	1380	1380

Max. flow capacity, DN 65, nm3/h						
P inlet, mbar	P outlet, mbar					
	80	110	160	200	300	390
500	755	810	755	810	700	650
1000	1080	1180	1180	1180	1180	1180
3000	2400	2400	2400	2400	2400	2400
6000	2400	2400	2400	2400	2400	2400

Max. flow capacity, DN 80, nm3/h						
P inlet, mbar	P outlet, mbar					
	80	110	160	200	300	390
500	880	945	880	945	820	755
1000	1260	1380	1380	1380	1380	1380
3000	2800	2800	2800	2800	2800	2800
6000	2800	2800	2800	2800	2800	2800

Max. flow capacity, DN 100, nm3/h						
P inlet, mbar	P outlet, mbar					
	80	110	160	200	300	390
500	1250	1350	1350	1170	1250	1080
1000	1800	1950	1950	1950	1950	1950
3000	4000	4000	4000	4000	4000	4000
6000	4000	4000	4000	4000	4000	4000

Pressure regulators-stabilizers

with safety relief valve built in (PN16 flanges)

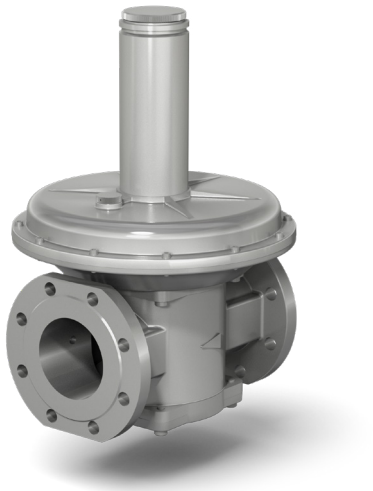

№ п/п	Characteristics	PC 1¼–0,5 - ... - C - ... fl., PN 16	PC 1½–0,5 - ... - C - ... fl., PN 16	PC 2–0,5 - ... - C - ... fl., PN 16	PC 2½–0,5 - ... - C - ..., PN 16	PC 3–0,5 - ... - C - ..., PN 16	PC 4–0,5 - ... - C - ..., PN 16	PC 1¼–6 - ... - C - ... fl., PN 16	PC 1½–6 - ... - C - ... fl., PN 16	PC 2–6 - ... - C - ... fl., PN 16	PC 2½–6 - ... - C - ..., PN 16	PC 3–6 - ... - C - ..., PN 16	PC 4–6 - ... - C - ..., PN 16
Version		with PN 16 flanges											
1	Body material	aluminium											
2	Nominal diameter (DN)	32	40	50	65	80	100	32	40	50	65	80	100
3	Max. inlet operating pressure, bar.	0,5						6					
4	Center to center distance of connecting orifices, mm. / orifice diameter, mm. (number of orifices)	100 / 18 (4)	110 / 18 (4)	125 / 18 (4)	145 / 18 (4)	160 / 18 (8)	180 / 18 (8)	100 / 18 (4)	110 / 18 (4)	125 / 18 (4)	145 / 18 (4)	160 / 18 (8)	180 / 18 (8)
5	Outlet pressure adjustment range, mbar	5,5–10; 6,5–18; 5,5–30; 8–40; 25–55; 25–70; 45–100; 80–150; 80–200			7–15; 8–20; 7–30; 11–44; 25–70; 31–100; 60–130; 90–170; 75–210; 165–300		5,5-10; 6-15; 6-20; 10-35; 20-50; 20-70; 45-100 75-150; 70-190	110–245; 175–370; 185–460			130–230; 165–390		70–150; 100–230
		(determined by the type of spring used)											
6	Actuation range of safety relief valve, mbar	5,5–30 8–205			5,5–65 40–170		2,5–80 30–250	30–270 150–500			130–300 280–460		50–180 80–250
7	Weight, kg., max.	7,1	7,4	7,7	12	16	19	7,3	7,5	7,9	12	16	19
8	Dimensions, mm., max.												
	а) Length (installation)	230			260	290	314	230			260	290	314
	б) Width	250			285		356	250			285		356
	в) Height	490			410	430	530	460			472	492	530
9	Temperature of operation medium, °C	–30...+70											
10	Mounting position	Horizontal (recommended), vertical											

Gas flow capacity of pressure regulators-stabilizers with PN16 flanges - see pages 113, 115.

Ordering the pressure regulator with PN 16 flanges, please, specify the type of connecting flanges.
Order example: Pressure regulator PC3-0,5-165-300-C-40-170 (Version: with PN 16 flanges).

Pressure regulators-stabilizers
with safety shut-off valve

Function

Pressure regulators-stabilizers with safety shut-off valve are applied for regulation and keeping the outlet pressure (gas flow rate) stable within set values regardless the inlet pressure change of hydrocarbon gases, gas phases of liquified gases, compressed air and other non-aggressive gases. Pressure regulators-stabilizers operate without external power source. Safety shut-off valve as a part of regulator shuts-off gas supply when outlet pressure significantly exceeds the set values (in emergency cases).

Field of application

Gas pressure regulating stations and plants, gas burners, gas consuming devices and devices of similar purpose, which require to maintain the pressure (gas flow rate) stable.

Code structure

1	2	3	4	5	6
РС	х	х	х-х	К	ТУ BY 200020142.030-2013

1. **РС** — series
2. Connection size, inches
3. Max. operating pressure range:
   0,5 — 0,5 bar
   6 — 6 bar
4. Outlet pressure adjustment range, mbar (lower - upper limit)
5. **К** — equipped with safety shut-off valve
6. Technical conditions number.

Climatic version:
–30...+40 °С and –40...+40 °С — installation in closed unheated premises (spaces).

Notes:

Outlet pressure adjustment range is determined by the type of spring, installed in regulator's body.
Body material — aluminium.

Pressure regulators-stabilizers

with safety shut-off valve (pressure up to 0,5 bar)

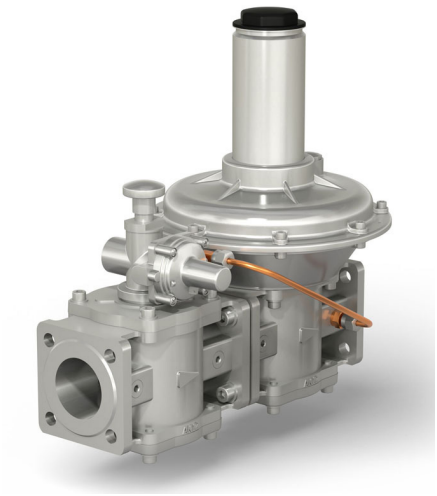

№ p/p	Characteristics	PC 1–0,5–...–K fl.	PC 1¼–0,5–...–K fl.	PC 1½–0,5–...–K fl.	PC 2–0,5–...–K fl.	PC 2½–0,5–...–K	PC 3–0,5–...–K	PC 4–0,5–...–K	PC 1¼–0,5–...–K fl., PN 16	PC 1½–0,5–...–K fl., PN 16	PC 2–0,5–...–K fl., PN 16	PC 2½–0,5–...–K, PN 16	PC 3–0,5–...–K, PN 16	PC 4–0,5–...–K, PN 16
Version									with PN 16 flanges					
1	Nominal diameter (DN)	25	32	40	50	65	80	100	32	40	50	65	80	100
2	Max. inlet operating pressure, bar.	0,5												
3	Center to center distance of connecting orifices, mm. / orifice diameter, mm. (number of orifices)	75 / 11 (4)	90 / 14 (4)	100 / 14 (4)	110 / 14 (4)	130 / 14 (4)	150 / 18 (4)	170 / 18 (4)	100 / 18 (4)	110 / 18 (4)	125 / 18 (4)	145 / 18 (4)	160 / 18 (8)	180 / 18 (8)
4	Outlet pressure adjustment range, mbar	60–110; 100–150; 140–200												
		(determined by the type of spring used)												
5	Actuation range of safety shut-off valve, mbar	60–120; 110–230												
6	Weight, kg., max.	8,1	11,5	11,8	12,6	25	33	36	12,5	13	14	27	35	38
7	Dimensions, mm., max.													
	а) Length (general) Length (installation)	320	380 349		405 374	495 470	529 516	595 556	460			520	580	628
	б) Width	350	380			390		430	380			390		430
	в) Height	233	490			410	430	530	490			410	430	530
8	Temperature of operation medium, °C	–30...+70												
9	Mounting position	Horizontal (recommended), vertical												

Ordering the pressure regulator with PN 16 flanges, please, specify the type of connecting flanges.
Order example: Pressure regulator PC2½-0,5-60-110-K (Version: with PN 16 flanges).

Pressure regulators-stabilizers

with safety shut-off valve (pressure up to 6 bar)

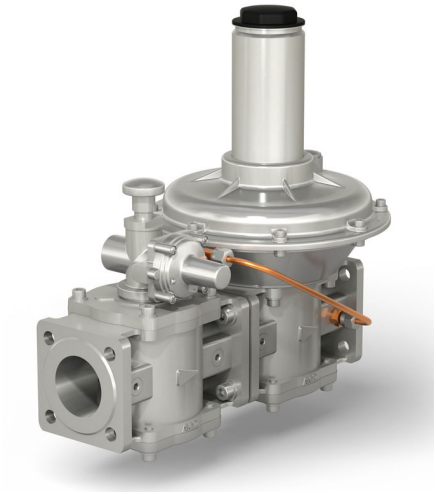

№ p/p	Characteristics	PC 1–6–...–К fl.	PC 1¼–6–...–К fl.	PC 1½–6–...–К fl.	PC 2–6–...–К fl.	PC 2½–6–...–К	PC 3–6–...–К	PC 4–6–...–К	PC 1¼–6–...–К fl., PN 16	PC 1½–6–...–К fl., PN 16	PC 2–6–...–К fl., PN 16	PC 2½–6–...–К, PN 16	PC 3–6–...–К, PN 16	PC 4–6–...–К, PN 16
Version									with PN 16 flanges					
1	Nominal diameter (DN)	25	32	40	50	65	80	100	32	40	50	65	80	100
2	Max. inlet operating pressure, bar.	6												
3	Center to center distance of connecting orifices, mm. / orifice diameter, mm. (number of orifices)	75 / 11 (4)	90 / 14 (4)	100 / 14 (4)	110 / 14 (4)	130 / 14 (4)	150 / 18 (4)	170 / 18 (4)	100 / 18 (4)	110 / 18 (4)	125 / 18 (4)	145 / 18 (4)	160 / 18 (8)	180 / 18 (8)
4	Outlet pressure adjustment range, mbar	80–160; 100–230; 180–520	80–180; 160–260; 250–450			80–200; 110–300; 160–390		80–140; 100–180; 160–240	80–180; 160–260; 250–450			80–200; 110–300; 160–390		80–140; 100–180; 160–240
		(determined by the type of spring used)												
5	Actuation range of safety shut-off valve, mbar	110–180; 130–260; 250-500				90-160; 130–260; 250-500		110-180; 130–260; 250-500	110–180; 130–260; 250-500			90-160; 130–260; 250-500		110-180; 130–260; 250-500
6	Weight, kg., max.	8,1	11,5	11,8	12,6	25	33	36	12,5	13	14	27	35	38
7	Dimensions, mm., max.													
	а) Length (general) Length (installation)	320	380 349		405 374	495 470	529 516	556	460			520	580	628
	б) Width	350	380			390		430	380			390		430
	в) Height	233	460			472	492	530	460			472	492	530
8	Temperature of operation medium, °C	–30...+70												
9	Mounting position	Horizontal (recommended), vertical												

Ordering the pressure regulator with PN 16 flanges, please, specify the type of connecting flanges.
Order example: Pressure regulator PC2½-6-160-390-К (Version: with PN 16 flanges).

Pressure regulators-stabilizers

with safety shut-off valve and safety relief valve built in

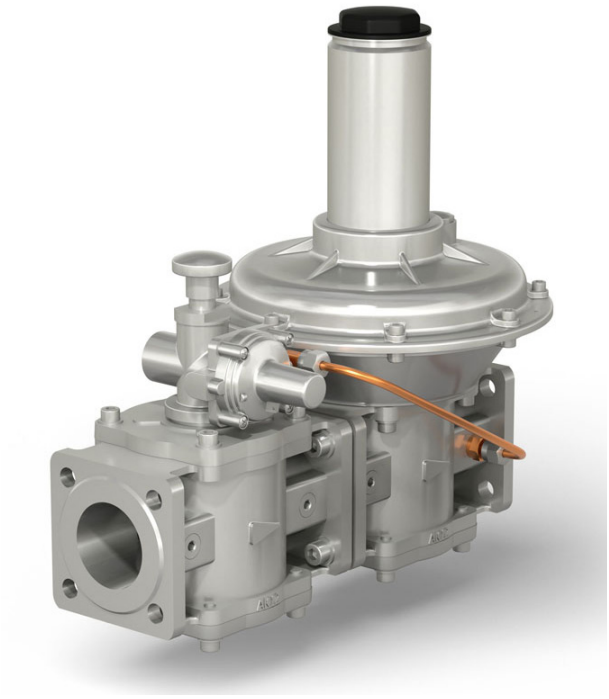

Function

Pressure regulators-stabilizers with safety shut-off and safety relief valve built in are applied for regulation and keeping the outlet pressure (gas flow rate) stable within set values regardless the inlet pressure change of hydrocarbon gases, gas phases of liquified gases, compressed air and other non-aggressive gases. Pressure regulators-stabilizers operate without external power source.

Safety shut-off valve as a part of regulator shuts-off gas supply when outlet pressure significantly exceeds the set values (in emergency cases)

Safety relief valve as a part of regulator releases excess volume of gas to the atmosphere when outlet pressure slightly exceeds the set values.

Field of application

Gas pressure regulating stations and plants, gas burners, gas consuming devices and devices of similar purpose, which require to maintain the pressure (gas flow rate) stable.

Code structure

1	2	3	4	5	6
PC	x	x	x-x	KC	ТУ BY 200020142.030-2013

1. **PC** — series
2. Connection size, inches
3. Max. operating pressure range:
   0,5 — 0,5 bar
   6 — 6 bar
4. Outlet pressure adjustment range, mbar (lower - upper limit)
5. **KC** — equipped with safety shut-off and safety relief valve built in
6. Technical conditions number.

Climatic version:
–30...+40 °C and –40...+40 °C — installation in closed unheated premises (spaces).

Notes:

Outlet pressure adjustment range is determined by the type of spring, installed in regulator's body.
Body material — aluminium.

Pressure regulators-stabilizers

with safety shut-off valve and safety relief valve built in (pressure up to 0,5 bar)

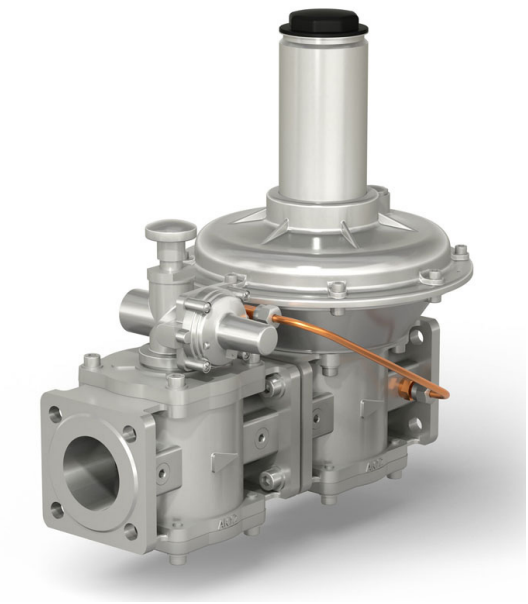

№ p/p	Characteristics	PC 1–0,5–...–КС fl.	PC 1¼–0,5–...–КС fl.	PC 1½–0,5–...–КС fl.	PC 2–0,5–...–КС fl.	PC 2½–0,5–...–КС	PC 3–0,5–...–КС	PC 4–0,5–...–КС	PC 1¼–0,5–...–КС fl., PN 16	PC 1½–0,5–...–КС fl., PN 16	PC 2–0,5–...–КС fl., PN 16	PC 2½–0,5–...–КС, PN 16	PC 3–0,5–...–КС, PN 16	PC 4–0,5–...–КС, PN 16
Version									with PN 16 flanges					
1	Nominal diameter (DN)	25	32	40	50	65	80	100	32	40	50	65	80	100
2	Max. inlet operating pressure, bar.	0,5												
3	Center to center distance of connecting orifices, mm. / orifice diameter, mm. (number of orifices)	75 / 11 (4)	90 / 14 (4)	100 / 14 (4)	110 / 14 (4)	130 / 14 (4)	150 / 18 (4)	170 / 18 (4)	100 / 18 (4)	110 / 18 (4)	125 / 18 (4)	145 / 18 (4)	160 / 18 (8)	180 / 18 (8)
4	Outlet pressure adjustment range, mbar	90–170; 165–300	80–150; 80–200			75–120; 80–150		75–150; 70–190	80–150; 80–200			75–120; 80–150		75–150; 70–190
		(determined by the type of spring used)												
5	Actuation range of safety shut-off valve, mbar	110–230; 220–450	80–150; 110–230						80–150; 110–230					
6	Actuation range of safety relief valve, mbar	7–400	8–205			40–170		30–250	8–205			40–170		30–250
7	Weight, kg., max.	8,1	11,5	11,8	12,6	25	33	36	12,5	13	14	27	35	38
8	Dimensions, mm., max.													
	а) Length (general) Length (installation)	320	380 349		405 374	495 470	529 516	595 556	460			520	580	628
	б) Width	350	380			390		430	380			390		430
	в) Height	233	490			410	430	530	490			410	430	530
9	Temperature of operation medium, °C	–30...+70												
10	Mounting position	Horizontal (recommended), vertical												

Ordering the pressure regulator with PN 16 flanges, please, specify the type of connecting flanges.
Order example: Pressure regulator PC4-0,5-75-150-КС (Version: with PN 16 flanges).

Pressure regulators-stabilizers PC-series

with safety shut-off valve and safety relief valve built in (pressure up to 6 bar)

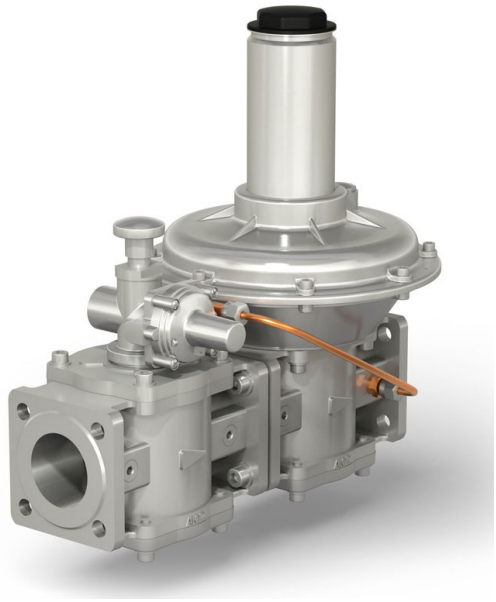

№ p/p	Characteristics	PC 1–6–...–KC fl.	PC 1¼–6–...–KC fl.	PC 1½–6–...–KC fl.	PC 2–6–...–KC fl.	PC 2½–6–...–KC	PC 3–6–...–KC	PC 4–6–...–KC	PC 1¼–6–...–KC fl., PN 16	PC 1½–6–...–KC fl., PN 16	PC 2–6–...–KC fl., PN 16	PC 2½–6–...–KC, PN 16	PC 3–6–...–KC, PN 16	PC 4–6–...–KC, PN 16
Version									with PN 16 flanges					
1	Nominal diameter (DN)	25	32	40	50	65	80	100	32	40	50	65	80	100
2	Max. inlet operating pressure, bar	6												
3	Center to center distance of connecting orifices, mm. / orifice diameter, mm. (number of orifices)	75 / 11 (4)	90 / 14 (4)	100 / 14 (4)	110 / 14 (4)	130 / 14 (4)	150 / 18 (4)	170 / 18 (4)	100 / 18 (4)	110 / 18 (4)	125 / 18 (4)	145 / 18 (4)	160 / 18 (8)	180 / 18 (8)
4	Outlet pressure adjustment range, mbar	110–175; 110–240; 180-560	110–245; 175–270; 185–460			130–230; 165–390		70–150; 100–230	110–245; 175–270; 185–460			130–230; 165–390		70–150; 100–230
		(determined by the type of spring used)												
5	Actuation range of safety shut-off valve, mbar	130–260; 250–500	110–245; 175–370; 185–460			130–230; 165–390		70–150; 100–230	110–245; 175–370; 185–460			130–230; 165–390		70–150; 100–230
6	Actuation range of safety relief valve, mbar	110–160	30–270; 150–500			130–300; 280–460		50–180; 80–250	30–270; 150–500			130–300; 280–460		50–180; 80–250
7	Weight, kg., max.	8,1	11,5	11,8	12,6	25	33	36	12,5	13	14	27	35	38
8	Dimensions, mm., max.													
	а) Length (general) Length (installation)	320	380 349		405 374	495 470	529 516	595 556	460			520	580	628
	б) Width	350	380			390		430	380			390		430
	в) Height	233	460			472	492	530	460			472	492	530
9	Temperature of operation medium, °C	–30...+70												
10	Mounting position	Horizontal (recommended), vertical												

Ordering the pressure regulator with PN 16 flanges, please, specify the type of connecting flanges.
Order example: Pressure regulator PC4-6-70-150-KC (Version: with PN 16 flanges).

Pressure regulators-stabilizers PC-series

with safety shut-off and safety relief valves in separate bodies

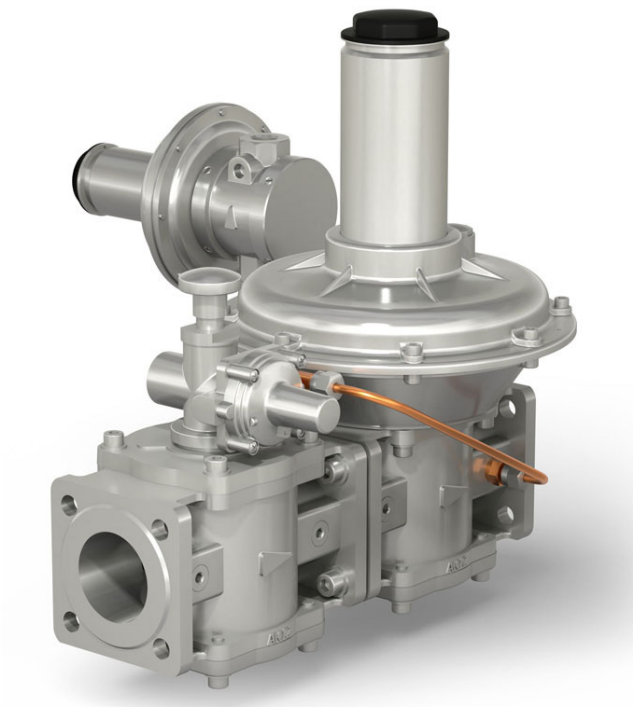

Function

Pressure regulators-stabilizers with safety shut-off and safety relief valve in separate bodies are applied for regulation and keeping the outlet pressure (gas flow rate) stable within set values regardless the inlet pressure change of hydrocarbon gases, gas phases of liquified gases, compressed air and other non-aggressive gases. Pressure regulators-stabilizers operate without external power source.

Safety shut-off valve as a part of regulator shuts-off gas supply when outlet pressure significantly exceeds the set values (in emergency cases)

Safety relief valve as a part of regulator releases excess volume of gas to the atmosphere when outlet pressure slightly exceeds the set values.

Field of application

Gas pressure regulating stations and plants, gas burners, gas consuming devices and devices of similar purpose, which require to maintain the pressure (gas flow rate) stable.

Code structure

1	2	3	4	5	6
PC	x	x	x-x	KZC	ТУ BY 200020142.030-2013

1. **PC** — series
2. Connection size, inches
3. Max. operating pressure range:
   0,5 — 0,5 bar
   6 — 6 bar
4. Outlet pressure adjustment range, mbar (lower - upper limit)
5. **KZC** — equipped with safety shut-off and safety relief valve in separate body
6. Technical conditions number.

Climatic version:
–30...+40 °C and –40...+40 °C — installation in closed unheated premises (spaces).

Notes:

Outlet pressure adjustment range is determined by the type of spring, installed in regulator's body.
Body material — aluminium.

Nominal diameter of regulator with safety shut-off and safety relief valve in separate body	Nominal diameter of safety relief valve applied
DN 25 - 50	DN 15
DN 65 - 100	DN 25

Pressure regulators-stabilizers PC-series
with safety shut-off and safety relief valves in separate bodies (pressure up to 0,5 bar)

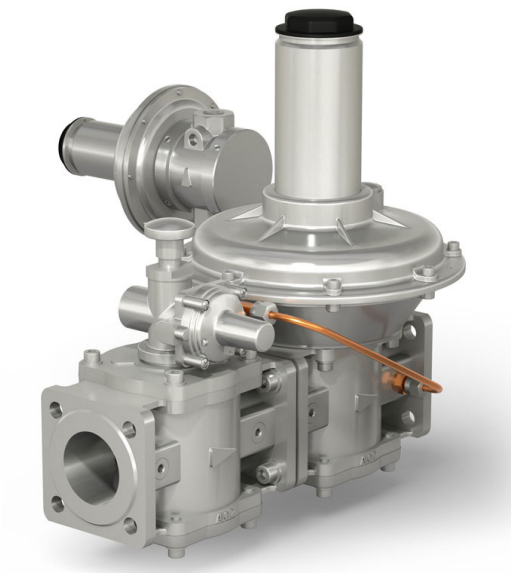

№ p/p	Characteristics	PC 1–0,5–...–KZC fl.	PC 1¼–0,5–...–KZC fl.	PC 1½–0,5–...–KZC fl.	PC 2–0,5–...–KZC fl.	PC 2½–0,5–...–KZC	PC 3–0,5–...–KZC	PC 4–0,5–...–KZC	PC 1¼–0,5–...–KZC fl., PN 16	PC 1½–0,5–...–KZC fl., PN 16	PC 2–0,5–...–KZC fl., PN 16	PC 2½–0,5–...–KZC, PN 16	PC 3–0,5–...–KZC, PN 16	PC 4–0,5–...–KZC, PN 16
Version									with PN 16 flanges					
1	Nominal diameter (DN)	25	32	40	50	65	80	100	32	40	50	65	80	100
2	Max. inlet operating pressure, bar	0,5												
3	Center to center distance of connecting orifices, mm. / orifice diameter, mm. (number of orifices)	75 / 11 (4)	90 / 14 (4)	100 / 14 (4)	110 / 14 (4)	130 / 14 (4)	150 / 18 (4)	170 / 18 (4)	100 / 18 (4)	110 / 18 (4)	125 / 18 (4)	145 / 18 (4)	160 / 18 (8)	180 / 18 (8)
4	Outlet pressure adjustment range, mbar	60–110; 100–150; 140–200												
		(determined by the type of spring used)												
5	Actuation range of safety shut-off valve, mbar	60–120; 110–230												
6	Actuation range of safety relief valve, mbar	20–150; 100–450												
7	Weight, kg., max.	10	13,8	14,0	14,1	28	36	39	14,5	15,8	16	30	38	41
8	Dimensions, mm., max.													
	а) Length (general) / Length (installation)	350 / 320	386 / 349		411 / 374	500 / 470	549 / 516	595 / 556	460			520	580	628
	б) Width	505	510				487	540	510				487	540
	в) Height	300	460			410	430	530	460			410	430	530
9	Temperature of operation medium, °C	–30...+70												
10	Mounting position	Horizontal (recommended), vertical												

Ordering the pressure regulator with PN 16 flanges, please, specify the type of connecting flanges.

Pressure regulators-stabilizers PC-series
with safety shut-off and safety relief valves in separate bodies (pressure up to 6 bar)

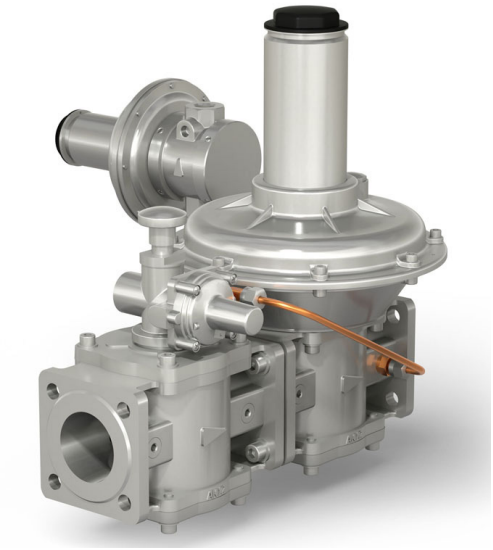

№ p/p	Characteristics	PC 1–6–...–KZC fl.	PC 1¼–6–...–KZC fl.	PC 1½–6–...–KZC fl.	PC 2–6–...–KZC fl.	PC 2½–6–...–KZC	PC 3–6–...–KZC	PC 4–6–...–KZC	PC 1¼–6–...–KZC fl., PN 16	PC 1½–6–...–KZC fl., PN 16	PC 2–6–...–KZC fl., PN 16	PC 2½–6–...–KZC, PN 16	PC 3–6–...–KZC, PN 16	PC 4–6–...–KZC, PN 16
Version									with PN 16 flanges					
1	Nominal diameter (DN)	25	32	40	50	65	80	100	32	40	50	65	80	100
2	Max. inlet operating pressure, bar.	6												
3	Center to center distance of connecting orifices, mm. / orifice diameter, mm. (number of orifices)	75 / 11 (4)	90 / 14 (4)	100 / 14 (4)	110 / 14 (4)	130 / 14 (4)	150 / 18 (4)	170 / 18 (4)	100 / 18 (4)	110 / 18 (4)	125 / 18 (4)	145 / 18 (4)	160 / 18 (8)	180 / 18 (8)
4	Outlet pressure adjustment range, mbar	80–160; 100–230; 180–520	80–180; 160–260; 250–450			80–200; 110–300; 160–390		80–140; 100–180; 160–240	80–180; 160–260; 250–450			80–200; 110–300; 160–390		80–140; 100–180; 160–240
		(determined by the type of spring used)												
5	Actuation range of safety shut-off valve, mbar	110–180; 130–260; 250-500				90-160; 130–260; 250-500		110-180; 130–260; 250-500	110–180; 130–260; 250-500			90-160; 130–260; 250-500		110-180; 130–260; 250-500
6	Actuation range of safety relief valve, mbar	100-450												
7	Weight, kg., max.	10	13,8	14,0	14,1	28	36	39	14,5	15,8	16	30	38	41
8	Dimensions, mm., max.													
	а) Length (general) Length (installation)	350 320	386 349		411 374	500 470	549 516	595 556	460			520	580	628
	б) Width	505	510				487	540	510				487	540
	в) Height	300	400			472	492	530	400			472	492	530
9	Temperature of operation medium, °C	–30...+70												
10	Mounting position	Horizontal (recommended), vertical												

Ordering the pressure regulator with PN 16 flanges, please, specify the type of connecting flanges.

Max. flow capacity
for pressure regulators with safety shut-off valve with max. operating pressure 0,5 bar*

Max. flow capacity, DN 25, nm3/h							
P inlet, mbar	P outlet, mbar						
	60	70	100	110	140	150	200
100	36	-	-	-	-	-	-
300	42	44	49	50	54	55	-
500	49	50	56	57	62	64	72

Max. flow capacity, DN 32, nm3/h							
P inlet, mbar	P outlet, mbar						
	60	70	100	110	140	150	200
100	66	-	-	-	-	-	-
300	78	83	99	105	121	126	-
500	90	96	114	121	139	145	176

Max. flow capacity, DN 40, nm3/h							
P inlet, mbar	P outlet, mbar						
	60	70	100	110	140	150	200
100	94	-	-	-	-	-	-
300	110	114	126	130	142	146	-
500	127	132	146	150	164	169	192

Max. flow capacity, DN 50, nm3/h							
P inlet, mbar	P outlet, mbar						
	60	70	100	110	140	150	200
100	213	-	-	-	-	-	-
300	252	261	286	295	322	330	-
500	290	301	331	341	371	382	432

Max. flow capacity, DN 65, nm3/h							
P inlet, mbar	P outlet, mbar						
	60	70	100	110	140	150	200
100	310	-	-	-	-	-	-
300	367	386	441	459	514	532	-
500	423	445	508	530	593	614	720

Max. flow capacity, DN 80, nm3/h							
P inlet, mbar	P outlet, mbar						
	60	70	100	110	140	150	200
100	391	-	-	-	-	-	-
300	463	496	538	558	614	633	-
500	534	555	621	643	709	730	840

Max. flow capacity, DN 100, nm3/h							
P inlet, mbar	P outlet, mbar						
	60	70	100	110	140	150	200
100	494	-	-	-	-	-	-
300	584	608	678	702	774	792	-
500	674	701	783	810	892	919	1056

* Max. gas flow caracity is 10% lower for the version with safety relief valve built in.

Max. flow capacity
for pressure regulators with safety shut-off valve with max. operating pressure 6 bar*

Max. flow capacity, DN 25, nm3/h						
P inlet, mbar	P outlet, mbar					
	80	100	160	180	230	520
500	56	68	70	88	112	-
1000	82	112	102	128	160	184
3000	138	208	172	216	264	360
6000	154	240	192	240	272	368

Max. flow capacity, DN 32, nm3/h						
P inlet, mbar	P outlet, mbar					
	80	160	180	250	260	450
500	200	157	171	121	121	-
1000	285	242	257	200	200	285
3000	725	697	397	640	640	640
6000	995	670	980	995	995	995

Max. flow capacity, DN 40, nm3/h						
P inlet, mbar	P outlet, mbar					
	80	160	180	250	260	450
500	221	174	190	134	134	-
1000	315	268	285	220	220	315
3000	805	775	775	710	710	710
6000	1100	1075	1090	1100	1100	1100

Max. flow capacity, DN 50, nm3/h						
P inlet, mbar	P outlet, mbar					
	80	160	180	250	260	450
500	246	193	211	150	150	-
1000	352	300	315	245	245	352
3000	895	865	865	790	790	790
6000	1230	1195	1210	1230	1230	1230

Max. flow capacity, DN 65, nm3/h						
P inlet, mbar	P outlet, mbar					
	80	110	160	200	300	390
500	670	720	670	720	625	575
1000	960	1055	1055	1055	1055	1055
3000	2160	2160	2160	2160	2160	2160
6000	2160	2160	2160	2160	2160	2160

Max. flow capacity, DN 80, nm3/h						
P inlet, mbar	P outlet, mbar					
	80	110	160	200	300	390
500	780	840	780	840	725	670
1000	1120	1230	1230	1230	1230	1230
3000	2500	2500	2500	2500	2500	2500
6000	2500	2500	2500	2500	2500	2500

Max. flow capacity, DN 100, nm3/h						
P inlet, mbar	P outlet, mbar					
	80	110	160	200	300	390
500	1120	1200	1200	1040	1120	960
1000	1600	1750	1750	1750	1750	1750
3000	3600	3600	3600	3600	3600	3600
6000	3600	3600	3600	3600	3600	3600

*Max. gas flow caracity is 10% lower for the version with safety relief valve built in.

Zero governors and gas-air ratio regulators PC - series

Function

Zero governors are used to provide proportional regulation of gas flow depending on vacuum-gauge pressure at the output of regulator or in control point of the pipeline and to maintain the constant ratio of gas-air mixure

Gas-air ratio regulators are applied to produce gas-air mixture at the required ratio and to maintain that ratio automatically.

Field of application

Gas distributing and consumpting systems, gas ramps of gas burning devices, gas-engine plants and gas-piston power stations. Applied jointly with gas mixer.

Code structure

1	2	3	4	5	6
PC	x	x	x	x	ТУ BY 200020142.030-2013

1. **PC** — series;
2. Connection size, inches;
3. Max. operating pressure range:
   0,5 — 0,5 bar
4. **H** — Version - Zero governor;
   A — Version - Gas-air ratio regulator.
5. Only for version A:
   1 - Gas-air ratio regulator 1:1;
   2 - Gas-air ratio regulator (gas pressure is less than air pressure Pair / Pgas ≤ 10);
   3 - Gas-air ratio regulator (gas pressure is more than air pressure Pgas / Pair ≤ 2)
6. Technical conditions number.

Climatic version:
–30...+40 °C and –40...+40 °C — installation in closed unheated premises (spaces).

Notes:

Body material — aluminium.
Gas-air ratio regulator can be additionally equipped with:
- for the version 2 - butterfly valve on the air line;
- for the version 3 - butterfly valve on the gas line.

Zero governors PC-series
(Version H)

Gas pressure is supplied to the inlet pipe.

№ п/п	Characteristics	PC ½ - 0,5-H	PC ¾ - 0,5-H	PC 1 - 0,5-H	PC 1¼ - 0,5-H	PC 1½ - 0,5-H	PC 2 - 0,5-H	PC 1 - 0,5-H fl.	PC 1¼ - 0,5-H fl.	PC 1½ - 0,5-H fl.	PC 2 - 0,5-H fl.	PC 2½ - 0,5-H	PC 3 - 0,5-H	PC 4 - 0,5-H	PC 1¼ - 0,5-H fl., PN 16	PC 1½ - 0,5-H fl., PN 16	PC 2 - 0,5-H fl., PN 16	PC 2½ - 0,5-H, PN 16	PC 3 - 0,5-H, PN 16	PC 4 - 0,5-H, PN 16
Version															with PN 16 flanges					
1	Nominal diameter (DN)	15	20	25	32	40	50	25	32	40	50	65	80	100	32	40	50	65	80	100
2	Max. inlet operating pressure, bar	0,5																		
3	Thread diameter G, inches	½	¾	1	1¼	1½	2	—												
4	Outlet pressure adjustment range, mbar	(-3...+5)																		
5	Weight, kg., max.	2,0		2,3	6,0	6,5	6,9	3,5	4,5	6,5	6,9	11	15	18	7	7,5	8,0	12	16	19
6	Dimensions, mm., max.																			
	а) Length	105			162			160	187			235	258	278	230			260	290	314
	б) Width	150			250			150	250			285		356	250			285		356
	в) Height	230			398			230	398			410	440	535	398			410	440	535
7	Temperature of operation medium, °C	–30...+70																		
8	Mounting position	Horizontal (recommended), vertical																		

Ordering the pressure regulator with PN 16 flanges, please, specify the type of connecting flanges.
Order example: Pressure regulator PC 4-0,5-H (Version: with PN 16 flanges).

Pressure regulators-stabilizers PC-series
with safety shut-off valve compact version

Regulators-stabilizers with safety shut-off valve (and safety relief valve built in) also can be manufactured in compact version.

General technical data

Max. operating pressure	- 0,5 bar - 6 bar			
Nominal pressure	DN 15, 20, 25, 32, 40 и 50			
Type of connection	- threaded - flanged			
Installation length	DN 15, 20, 25		DN 32, 40, 50	
	threaded	flanged	threaded	flanged
	234 mm	180 mm	336 mm	270 mm

Setting parameters of outlet pressure, actuation pressure range of safety shut-off and safety relief valve built in are similar with the regulators in full-body version.

Order example of pressure regulator-stabilizer with safety shut-off valve, nominal diameter DN50, max. inlet pressure 0,5 bar, threaded connection, actuation pressure range 60-110 mbar, climatic version –30...+40 °C:

PC2-0,5-60-110 (version: compact).

Gas-air ratio regulators PC-series
(Version A)

The following versions of regulators are manufactured:

1. Gas-air pressure ratio regulator 1:1.

2. Gas-air pressure ratio regulator (gas pressure is less than air pressure Pair / Pgas ≤ 10). Such regulators are delivered with butterfly valve which is mounted on the air (control) line.

3. Gas-air pressure ratio regulator (gas pressure is more than air pressure Pgas / Pair ≤ 2). Such regulators are delivered with butterfly valve which is mounted on the gas (control) line.

Gas line is connected to the inlet pipe of the regulator, air line is connected to the threaded orifice on the top cover.

№ п/п	Characteristics	PC ½ - 0,5-A	PC ¾ - 0,5-A	PC 1 - 0,5-A	PC 1¼ - 0,5-A	PC 1½ - 0,5-A	PC 2 - 0,5-A	PC 1 - 0,5-A fl.	PC 1¼ - 0,5-A fl.	PC 1½ - 0,5-A fl.	PC 2 - 0,5-A fl.	PC 2½ - 0,5-A	PC 3 - 0,5-A	PC 4 - 0,5-A	PC 1¼ - 0,5-A fl., PN 16	PC 1½ - 0,5-A fl., PN 16	PC 2 - 0,5-A fl., PN 16	PC 2½ - 0,5-A, PN 16	PC 3 - 0,5-A, PN 16	PC 4 - 0,5-A, PN 16
Version															with PN 16 flanges					
1	Nominal diameter (DN)	15	20	25	32	40	50	25	32	40	50	65	80	100	32	40	50	65	80	100
2	Max. inlet operating pressure, bar	0,2																		
3	Thread diameter G, inches	½	¾	1	1¼	1½	2	—												
4	Outlet pressure adjustment range, mbar	(-10...+200)																		
5	Weight, kg., max.	2,0		2,3	6,0	6,5	6,9	3,5	4,5	6,5	6,9	11	15	18	7	7,5	8,0	12	16	19
6	Dimensions, mm., max.																			
	а) Length	105			162			160	187			235	258	278	230			260	290	314
	б) Width	150			250			150	250			285		356	250			285		356
	в) Height	230			398			230	398			410	440	535	398			410	440	535
7	Temperature of operation medium, °C	–30...+70																		
8	Mounting position	Horizontal (recommended), vertical																		

Ordering this type of regulators, the version should be specified.
Ordering the pressure regulator with PN 16 flanges, please, specify the type of connecting flanges.
Order example: Pressure regulator PC 3-0,5-A (Version: 2, with PN 16 flanges).

Domestic pressure regulators PC-series combined

with safety shut-off and safety relief valves built in

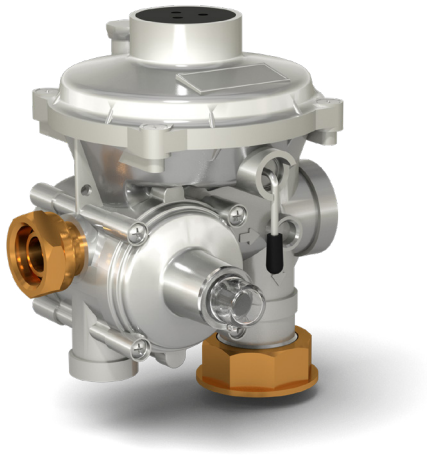

Function

Pressure regulators-stabilizers are applied for regulation and keeping the outlet pressure (gas flow rate) stable within set values regardless the inlet pressure change of hydrocarbon gases, gas phases of liquified gases, compressed air and other non-aggressive gases. Pressure regulators-stabilizers operate without external power source.

The construction includes safety shut-off and relief valves built in, which actuate in case of emergency situations (pressure increase).

Field of application

Individual and small apartment houses, domestic gas-regulating stations of cabinet type, gas pressure regulating stations and plants, gas burners, gas consuming devices and devices of similar purpose, which require to maintain the pressure (gas flow rate) stable.

Code structure

1	2	3	4	6
PC	x	KD	(Version)	TY BY 200020142.030-2013

1. **PC** — series
2. Max. flow capacity:
   6 — 6 nm³/h; 25 — 25 nm³/h;
   10 — 10 nm³/h; 50 — 50 nm³/h.
3. **KD** — combined type of regulator
4. Version: type and size of connection
5. Technical conditions number.

Climatic version:
-30...+40 °C — installation in closed unheated premises, boxes, cabinets or under roof without direct precipitation on the regulator;
-40...+40 °C — installation in boxes, cabinets or under roof without direct precipitation on the regulator.

General technical data

Operating pressure range	(0,05...0,6) MPa
Max. flow capacity	(6...50) nm³/h depending on the version
Outlet pressure adjustment range (Nominal)	(1,8...2,4) kPa (manufacturer's setting — 2 kPa)
Adjustment range of safety relief valve actuation	(3,15...4,2) kPa (manufacturer's setting — 3,5 kPa)
Adjustment range of safety shut-off valve actuation	
outlet pressure increase	(3,6–4,8) kPa (manufacturer's setting — 4,0 kPa)
outlet pressure decrease	1,5 kPa
Response tolerance of safety shut-off valve from nominal set values	±10 %
Dimensions (for angle version)	
Length	139 mm.
Width	136 mm.
Height	160 mm.
Connection size (standart)	
inlet pipe	DN 15 (coupling nut — G¾")
outlet pipe	DN 25 (nut — G1¼")

* We can manufacture the regulators with different connection size (should be specified additionally):
— with inlet pipes — DN 10 (coupling nut— G½”) or DN 20 (coupling nut — G1”);
— with outlet pipes — DN 20 (coupling nut — G1”) or DN 32 (coupling nut— G1½”).

Pressure regulators can be equipped with nipples for inlet and outlet pressure control (should be specified additionally)

Version — angle connection

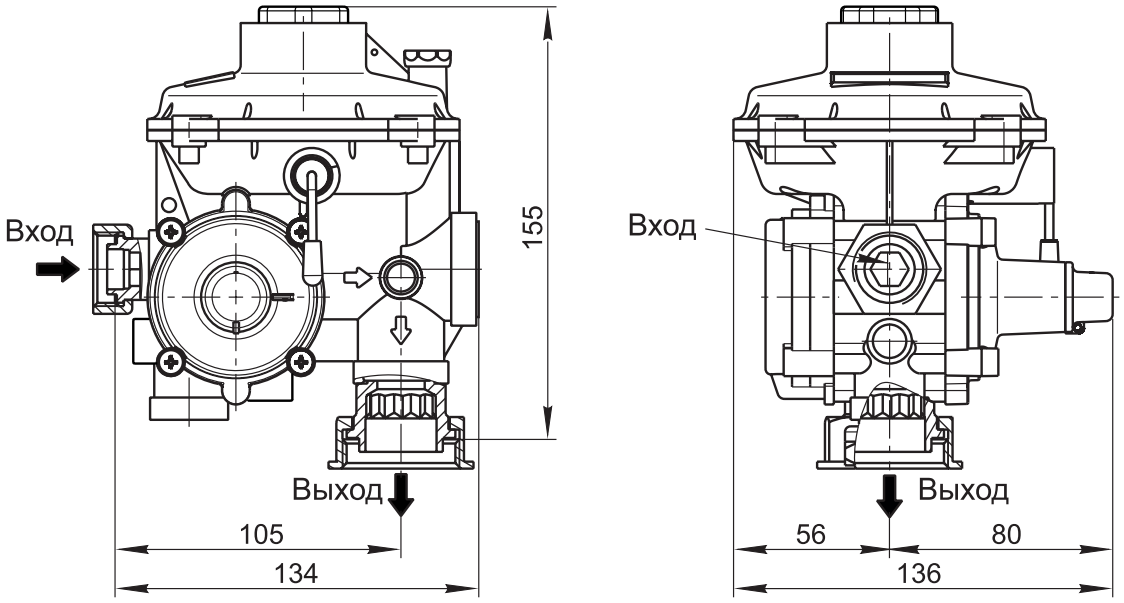

Version — angle connection (from the bottom upwards)

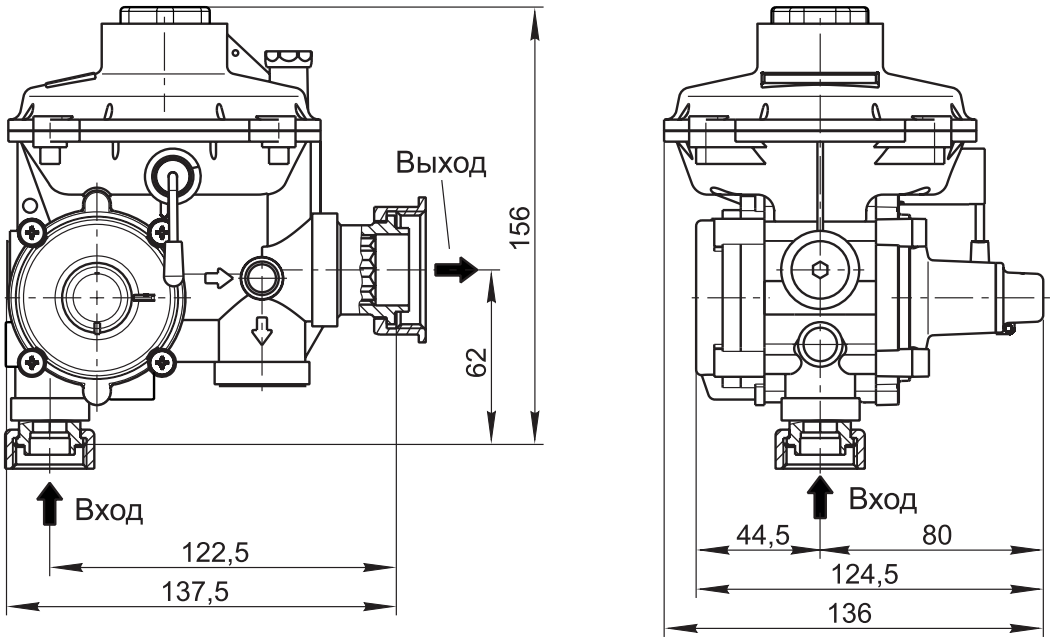

Version — linear connection

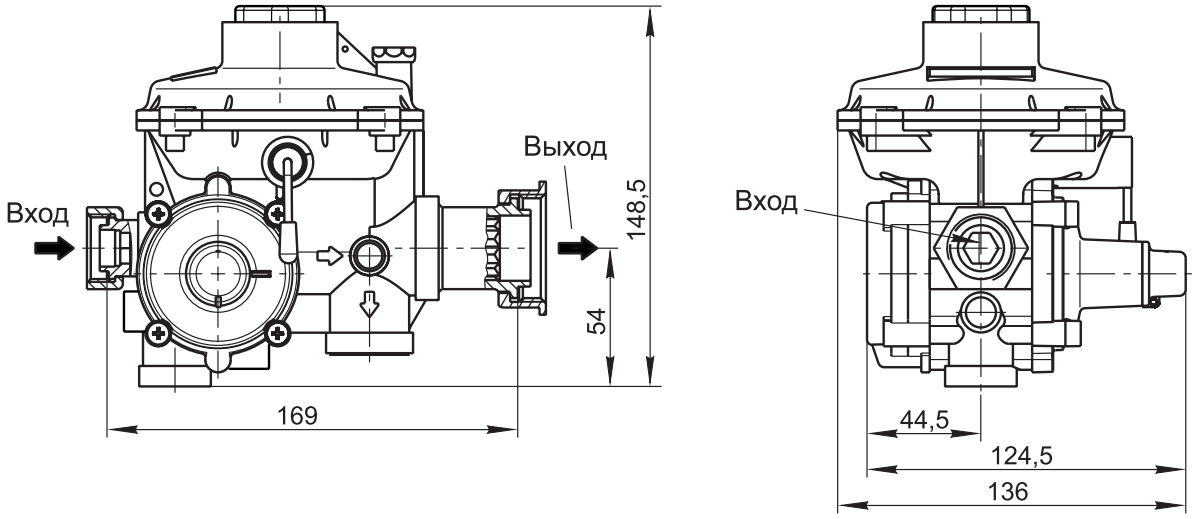

Version — U-shaped connection

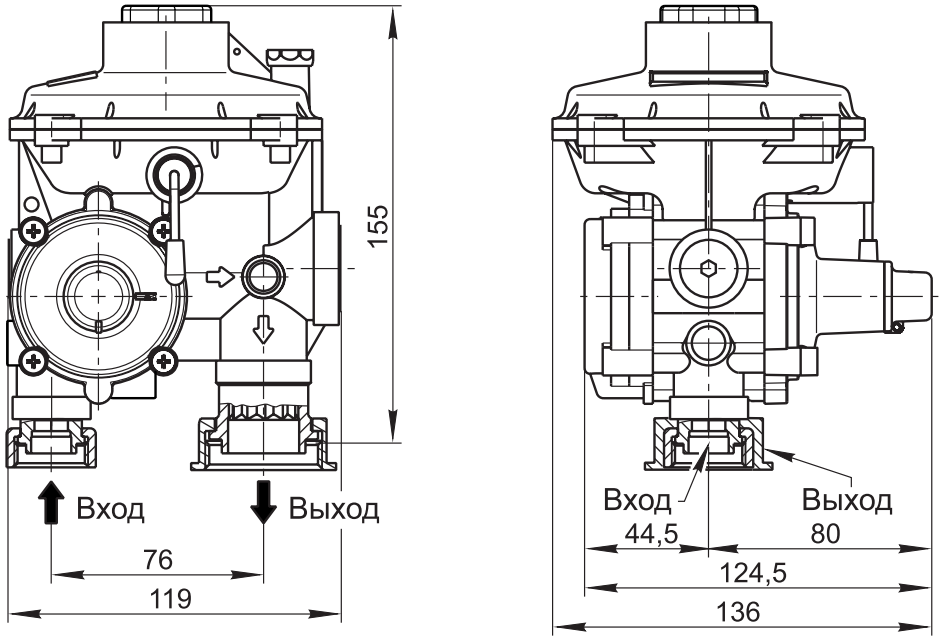

Gas flow capacity of pressure regulators PC...-KD

P inlet., kPa	Max. gas flow rate (nm³/h) for various versions of PC-KD regulator (P outlet.=2 kPa)			
	PC 6-KD	PC 10-KD	PC 25-KD	PC 50-KD
50	5,8	9,0	27,5	36,3
100	6,7	9,8	27,8	47,5
200	8,7	10,2	28,2	48,2
300	10,2	10,7	28,5	50,5
400	10,6	12,9	29,6	51,5
500	11,5	15,2	31,5	52,2
600	12,0	17,0	32,5	53,0

Order example

of combined pressure regulator with max. gas flow capacity 25 nm³/h, Version - angle connection, connection sizes: inlet— nut G¾", outlet—nut G1¼":

PC 25-KD version: angle connection, inlet— nut G¾", outlet—nut G1¼".